University of Stuttgart

SimTech Cluster of Excellence

Fatemeh Ansari

Control of a Parallel Very Flexible Robot

Fatemeh Ansari, M.Sc, Prof. Dr.-Ing. Prof. E.h. Peter Eberhard
{fatemeh.ansari, peter.eberhard}@itm.uni-stuttgart.de
Institute of Engineering and Computational Mechanics (ITM)
Pfaffenwaldring 9, 70569 Stuttgart, Germany

Motivation

- nonlinear modeling of a parallel very flexible robot
- nonlinear actuator control of an underactuated robot based on the drivers position and velocity
- nonlinear curvature control based on strain gauge signals

State of Current Work

System Modeling

- equations of motion of the multibody system

$$\boldsymbol{M}(\boldsymbol{q})\cdot\ddot{\boldsymbol{q}}+\boldsymbol{k}(\boldsymbol{q},\dot{\boldsymbol{q}},t)=\boldsymbol{g}(\boldsymbol{q},\dot{\boldsymbol{q}},t)+\boldsymbol{B}(\boldsymbol{q})\cdot\boldsymbol{u}+\boldsymbol{C}^T(\boldsymbol{q})\cdot\boldsymbol{\lambda}$$

$$\boldsymbol{c}(\boldsymbol{q},t)=0$$

- $\boldsymbol{\lambda}$: reaction forces due to the constraints
- $\boldsymbol{c}(\boldsymbol{q},t)$: loop closing constraints

servo drives with very high bandwidth in the current loop

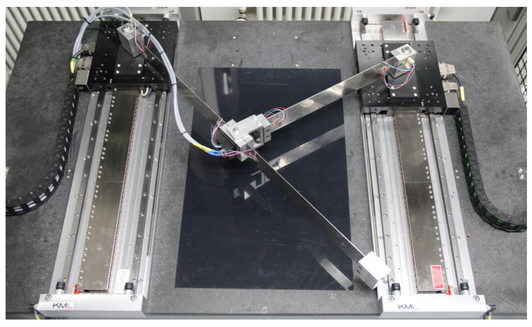

linear direct drives (permanent magnet synchronous motors)

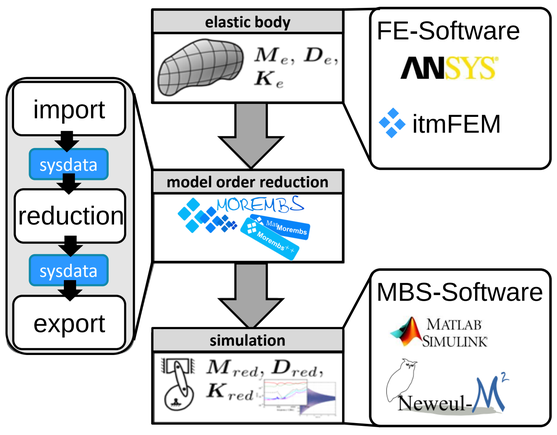

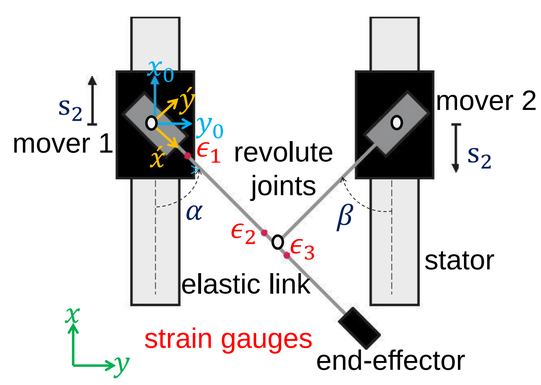

System Control

off-line control

- define trajectory as a servo constraint for the system
- finding the solution by model inversion based on the stability of internal dynamics and two point boundary values with the MATLAB solver bvp5c
- result of off-line control is desired trajectory for online tracking

online control

➢ **mover control**

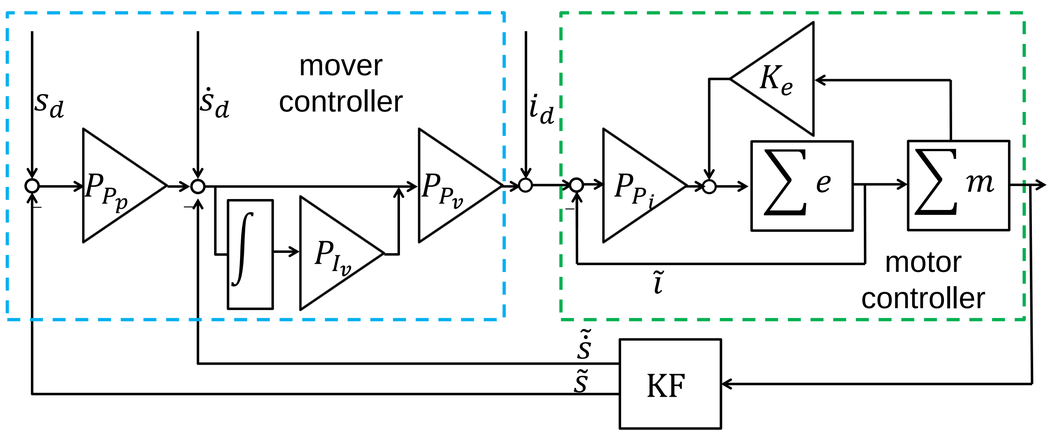

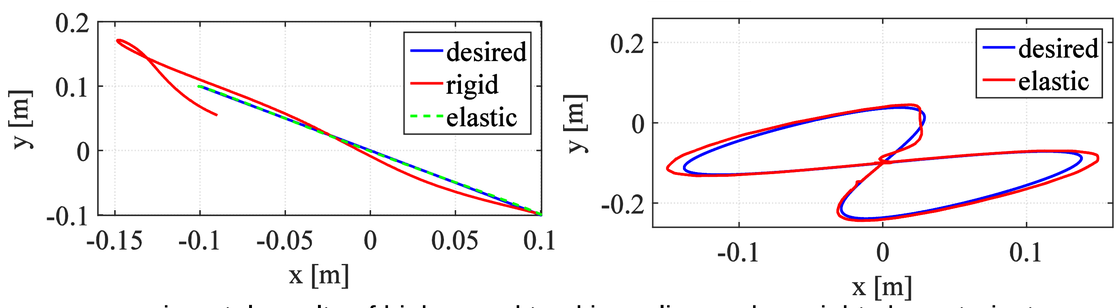

experimental results of high speed tracking a line and an eight shape trajectory

- experimental results of high speed tracking a line trajectory show elastic model based controller has high accuracy
- experimental results of high speed tracking an eight shape as a nonlinear trajectory show, that there are some unforeseen deformations and undesired oscillations in the elastic link

➢ **curvature control**

- strain gauge signals measure curvature of elastic link from main direction
- strain gauge signals are used to design a curvature controller in order to overcome the unforeseen motions

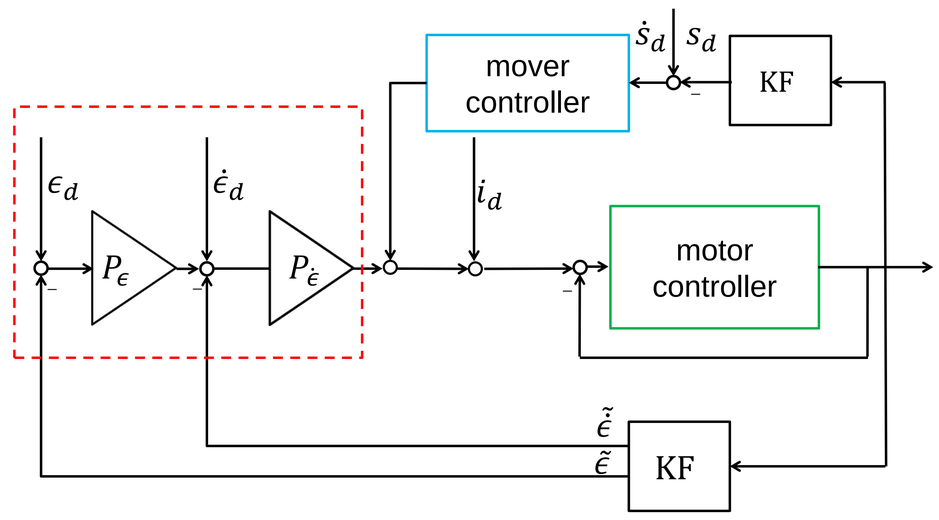

- for the damping task, the end-effector is replaced by an external force while the movers are in their positions without any movement

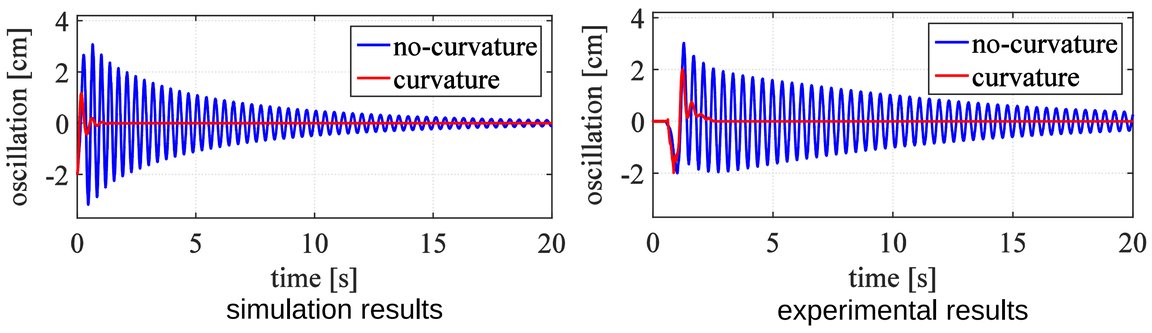

- experimental results of high speed tracking an eight shape using mover and curvature controllers show the undesired motions are extremely decreased

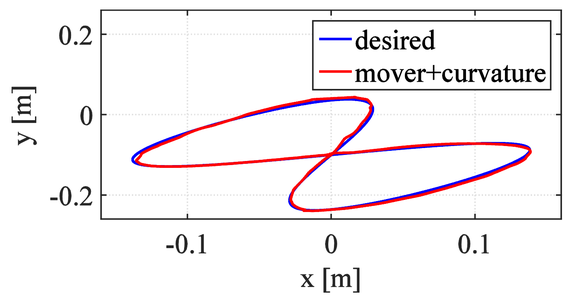

Conclusions

- high speed trajectory tracking using a combination of the mover and curvature controller
- strain gauge measurements were used as feedback data for damping task
- still there are some errors in tracking that should be removed
- a nonlinear observer shall be used to estimate all the states of system
- a nonlinear dynamic controller shall be designed based on the observer estimation for the underactuated system

References

[1] M. Burkhardt, P. Holzwarth, and R. Seifried, Inversion Based Trajectory Tracking Control for a Parallel Kinematic Manipulator with Flexible Links. Proceedings of the 11th Int. Conference on Vibration Problems, Lisbon, Portugal, 2013.

[2] M. Burkhardt, R. Seifried, and P. Eberhard, Experimental Studies of Control Concepts for a Parallel Manipulator with Flexible Links. Proceedings of the Int. Conference on Multibody System Dynamics (IMSD2014), Busan, South Korea, 2014.

www.simtech.uni-stuttgart.de

SimTech Cluster of Excellence